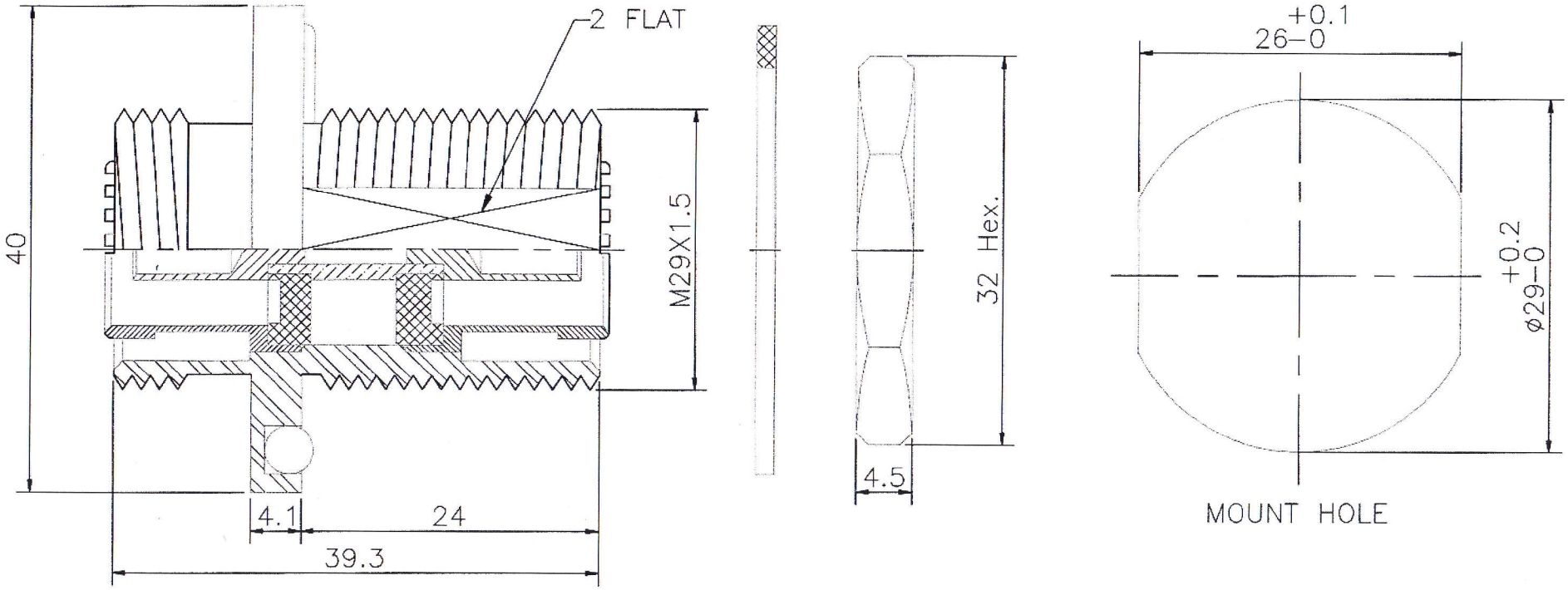

NO	Description	Material	Finish
1	O-Ring	Silicon	–
2	Body	Brass	SUCO
3	Insulator	PTFE	–
4	Nut	Brass	SUCO
5	Washer	Brass	SUCO
6	Contact	Brass	SILVER

Dimensions Are In Millimeters
Unless Otherwise Specified Tolerances

0.5-6 = ±0.2
6-30 = ±0.4
30-120 = ±0.6
120-315 = ±1.0
315-1000 = ±1.6
1000-2000 = ±2.4

DRAFT	Che	Part No 圖號	3814						
CHECKED	Iris	Title 圖名	7/16 Din Female to 7/16 Din Female Bulkhead Adapter						
APPROVED	Mingon	Date 日期	JUL/27/2012	比例	Scale 2:1	單位	Uint m/m	版次	Rev A

Show Me CABLES an INFINITE brand